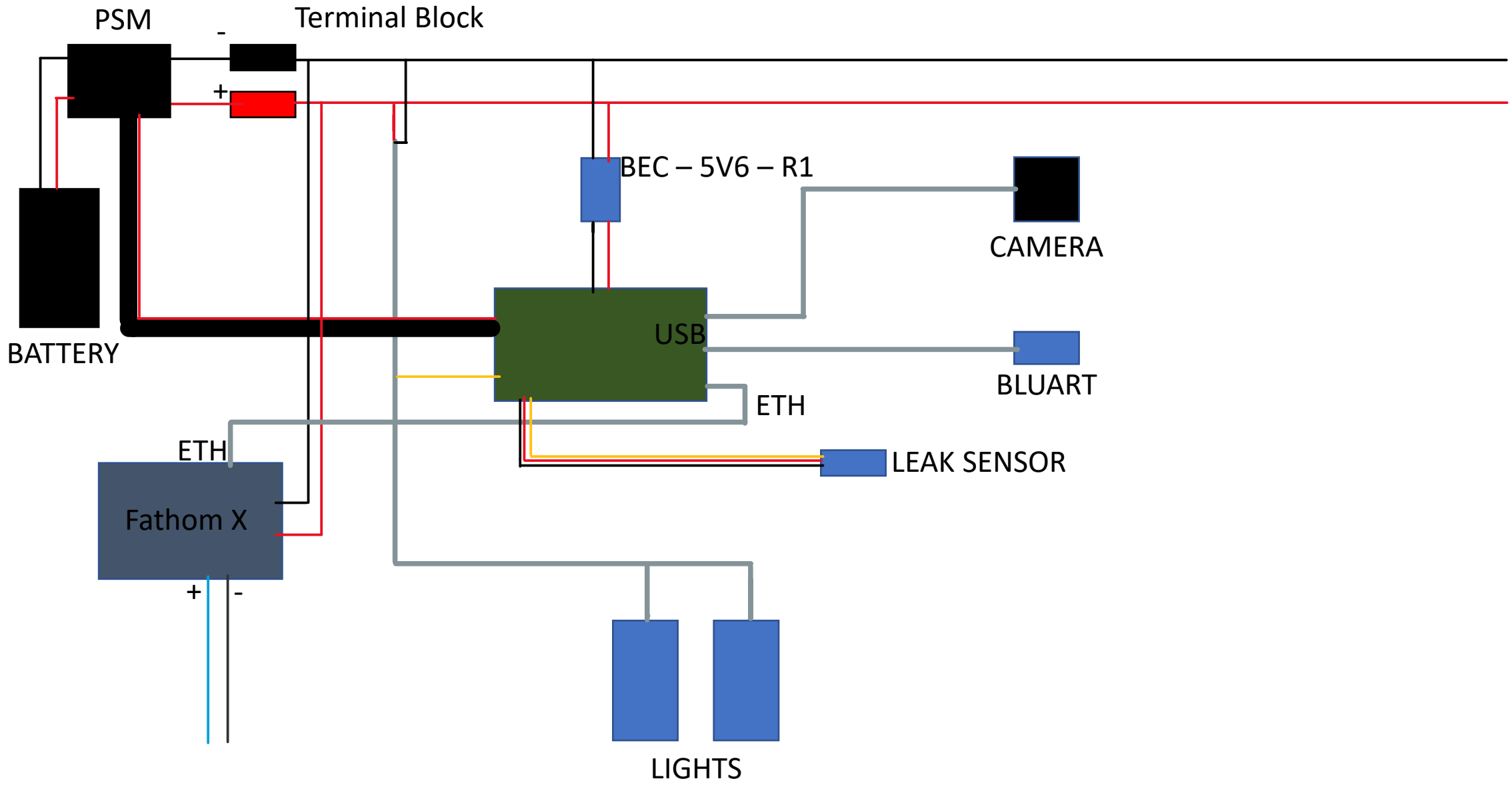
PSM
-
Terminal Block
+
BEC – 5V6 – R1
CAMERA
BATTERY
USB
BLUART
ETH
ETH
LEAK SENSOR
Fathom X
+
-
LIGHTS